Organised by:

Hosted by:

Supported by:

About Alstom Infrastructure solutions within Alstom

TRAINS

- Tram, metro, suburban/regional, high speed, very high speed, locomotive
- Components: traction, bogie, motor

46%

SERVICES

- Maintenance
- Modernisation
- Spare parts, repairs & overhaul
- Support services

22%

SIGNALLING

- Signalling solutions portfolio for:
  - Main lines
  - Urban
  - Control and security
- Sold as products or solutions

17%

INFRASTRUCTURE & SYSTEMS

- Turnkey integrated solutions
- Infrastructure solutions for electrification, track, depot and E&M equipment

15%

A group with annual sales of 7.3 B€

APS Solution for Trams

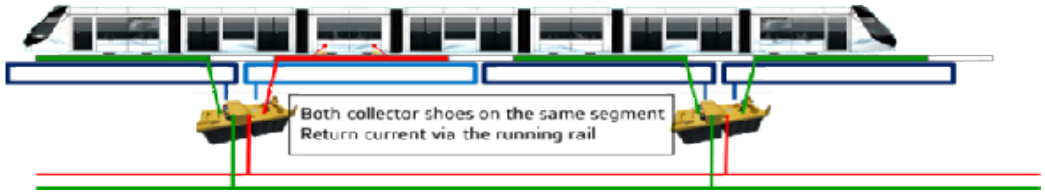

- Segmented ground feeding system
- APS in operation since 2003 in Bordeaux and now in 6 others cities
  - 3 other cities under construction
  - More than 25 000 000km run in APS
  - Total: 334 tramways and 141km

- APS provides same performances than OCS
  - Same: acceleration, max. speed, slopes, no aux. limitation, availability
  - Complete intrinsic safety (Safety Case confirmed by 6 ISA)
  - Fully Compatible with mixed traffic (pedestrians or crossroads)

Adaptation of our system for road application

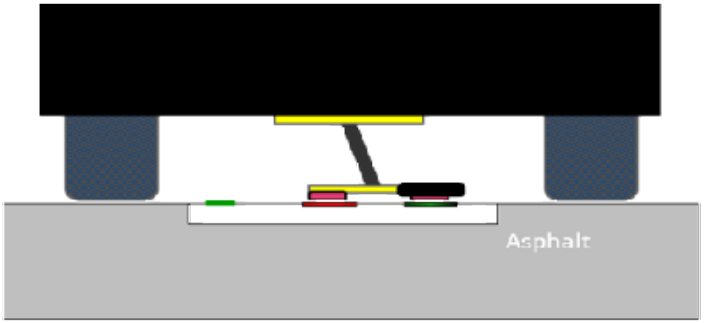

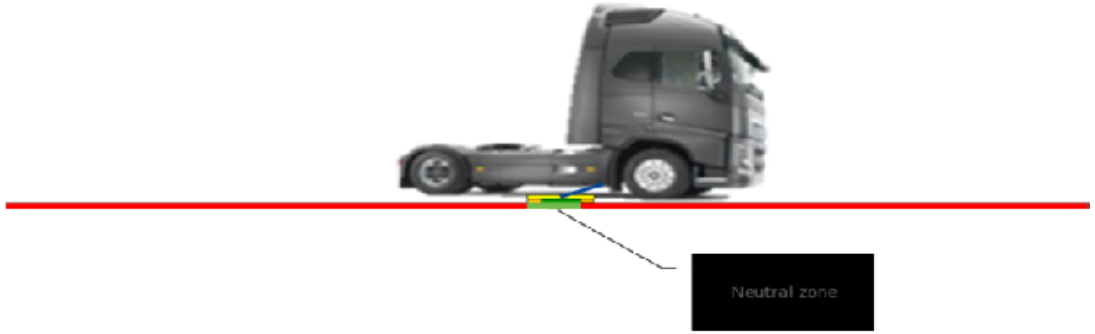

Power transfer principles

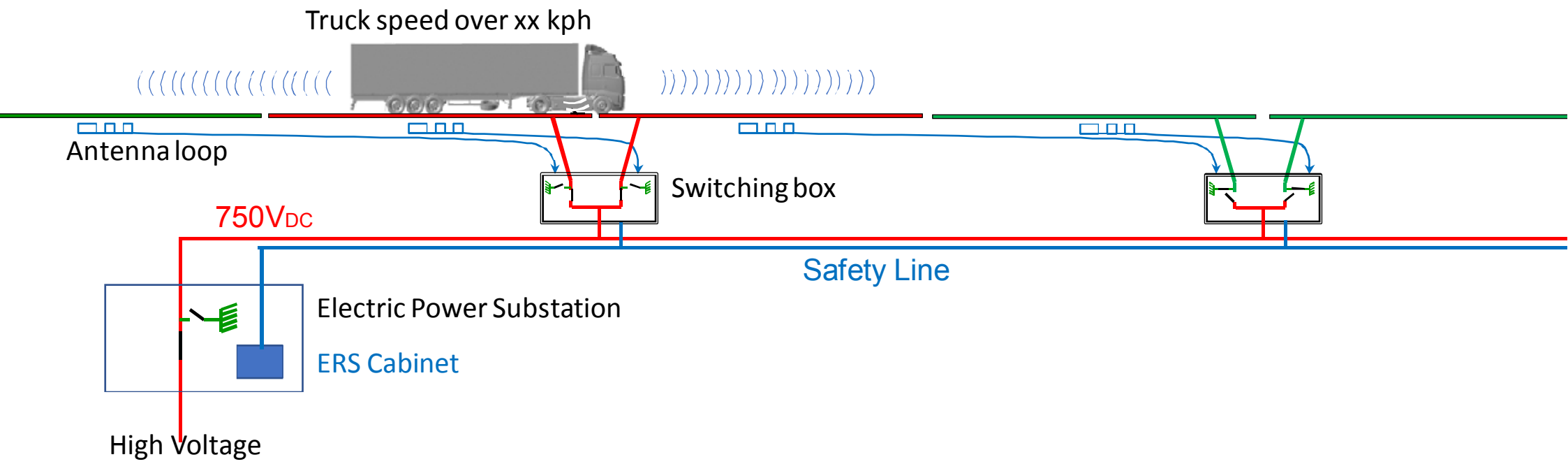

Power distribution architecture

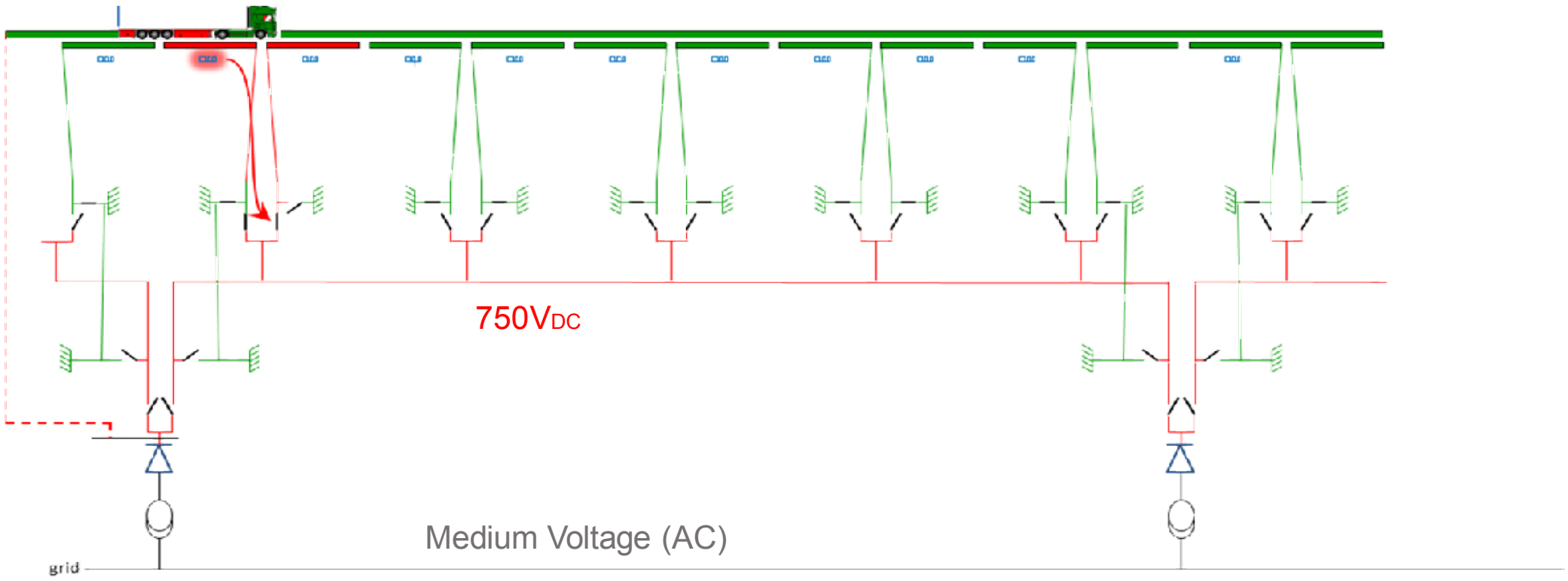

First demonstrator: Slide-In project in Sweden

- Strategic Vehicle Research and Innovation program launched by the Swedish Energy Agency (SEA) in 2011:
  - Comparison of 2 ground feeding solution for trucks:

- Criteria requested by the S.E.A.:
  - Power loss data
  - Economical data
  - Maintenance related data
  - Vehicle power requirement data

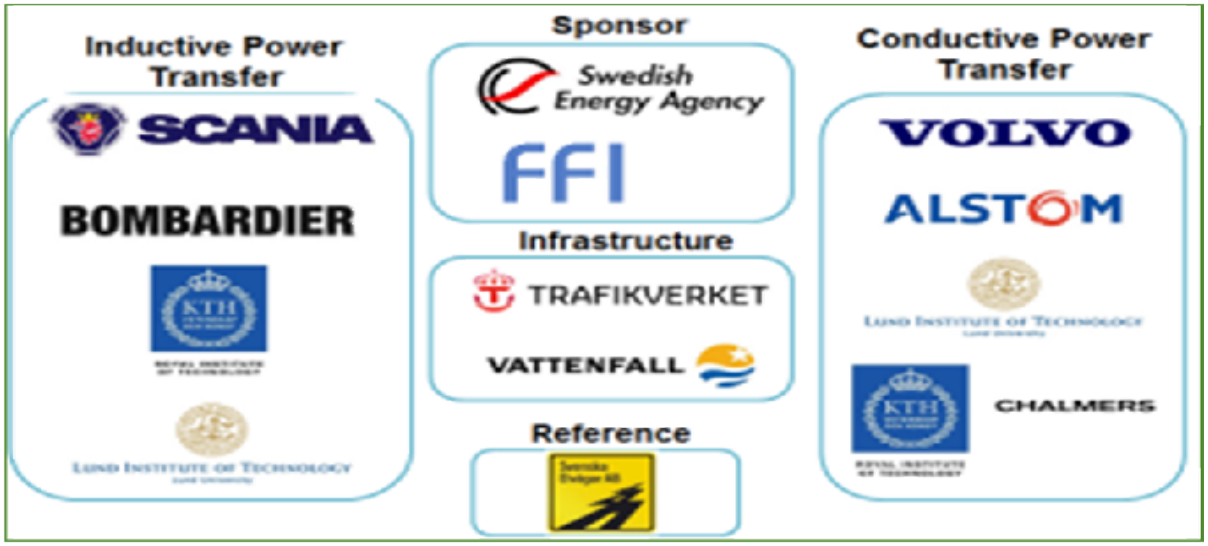

Demonstrator on Volvo's test track (Hällered)

Main results

- Test results => concept validated

Current collection test	Result
126kWatts 180Amps 690VDC transfer	✓
Truck speed more than 80km/h	✓
20km of continuous power transfer	✓
Rainy conditions	✓
Short circuits tests	✓
Track adherence tests	✓

- Intermediate Reports => **Conductive is more efficient and cheaper than Inductive**
  - Slide In ERS Conductive Report (Volvo + Alstom):
    https://www.viktoria.se/publications/Slide-in-ERS-Conductive-project-report
  - Slide In ERS Inductive Report (Scania + Bombardier):
    https://www.viktoria.se/publications/Slide-in-ERS-Inductive-project-report

SLIDE IN

VOLVO TEST TRACK

~40 km/h

Need for ERS solution

- To decarbonize the road freight transport and reach the objectives of the COP21 we need new solutions and the electrification can answer to these needs:
  - Reduction of CO^2 emissions
  - Reduction of other air pollutants (NOx, PM)

- Today, there are already several solutions to do it:

Conductive by the top

Inductive by the ground

Conductive by the ground

- **We are developing our Electric Road System by the ground because it offers the best compromised: Efficiency, Safety, Interoperability (Trucks, buses, cars), Robustness, Costs and Aesthetic**

Electric vehicle feeding & charging solutions

Dynamic continuous feeding

APS

- Power supply delivery to traction for tramway
- REX based on APS installed in 10 cities worldwide with over 25 million km run

APS for road

- Power supply delivery to traction for road vehicle on Highway
- 300m demonstrator in Sweden (Gothenburg)

Stationary charging

SRS for tramways

- Power supply delivery for stationary recharge for onboard energy storage (tramway)
- 11km under construction (Nice)

SRS for buses

- Power supply delivery for stationary recharge onboard energy storage (ebus).
- Innovation under deployment

Thank You very much for your attention